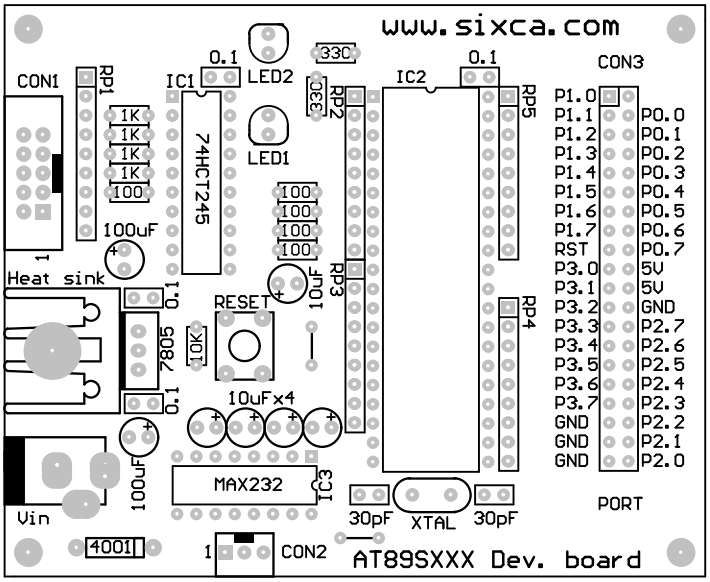
www.sixca.com
CON1
Rp1
1K
1K
1K
1K
100
100uF
Heat sink
7805
0.1
0.1
100uF
Vin
4001
IC1
74HCT245
0.1
LED2
LED1
330
330
100
100
100
100
10uF
RESET
10K
10uFx4
MAX232
IC3
1
CON2
Rp2
Rp3
IC2
0.1
Rp5
Rp4
30pF
XTAL
30pF
CON3
P1.0
P1.1
P1.2
P1.3
P1.4
P1.5
P1.6
P1.7
RST
P3.0
P3.1
P3.2
P3.3
P3.4
P3.5
P3.6
P3.7
GND
GND
GND
P0.0
P0.1
P0.2
P0.3
P0.4
P0.5
P0.6
P0.7
5V
5V
GND
P2.7
P2.6
P2.5
P2.4
P2.3
P2.2
P2.1
P2.0
PORT
AT89SXXX Dev. board